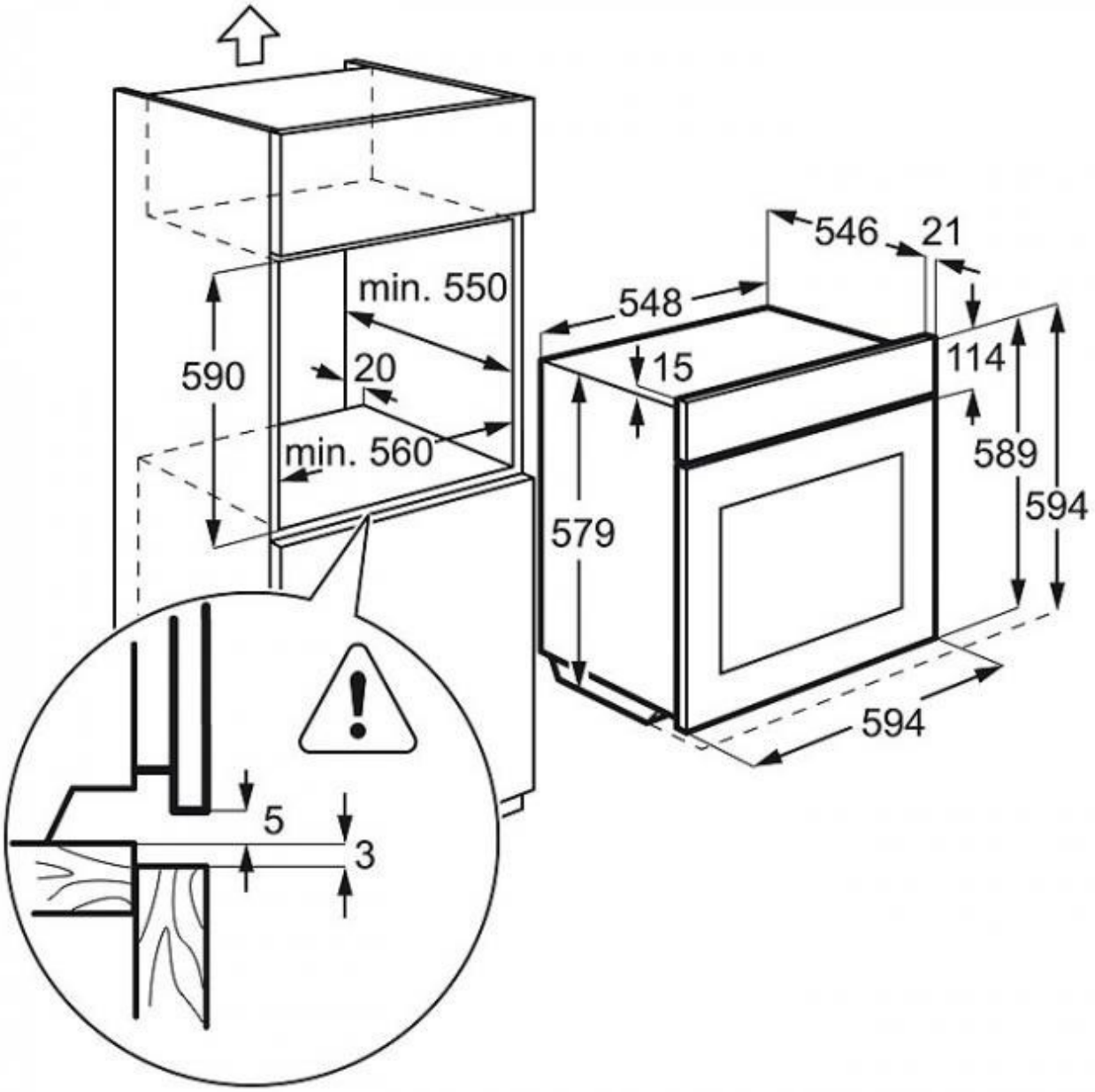PSGBOV140D002010